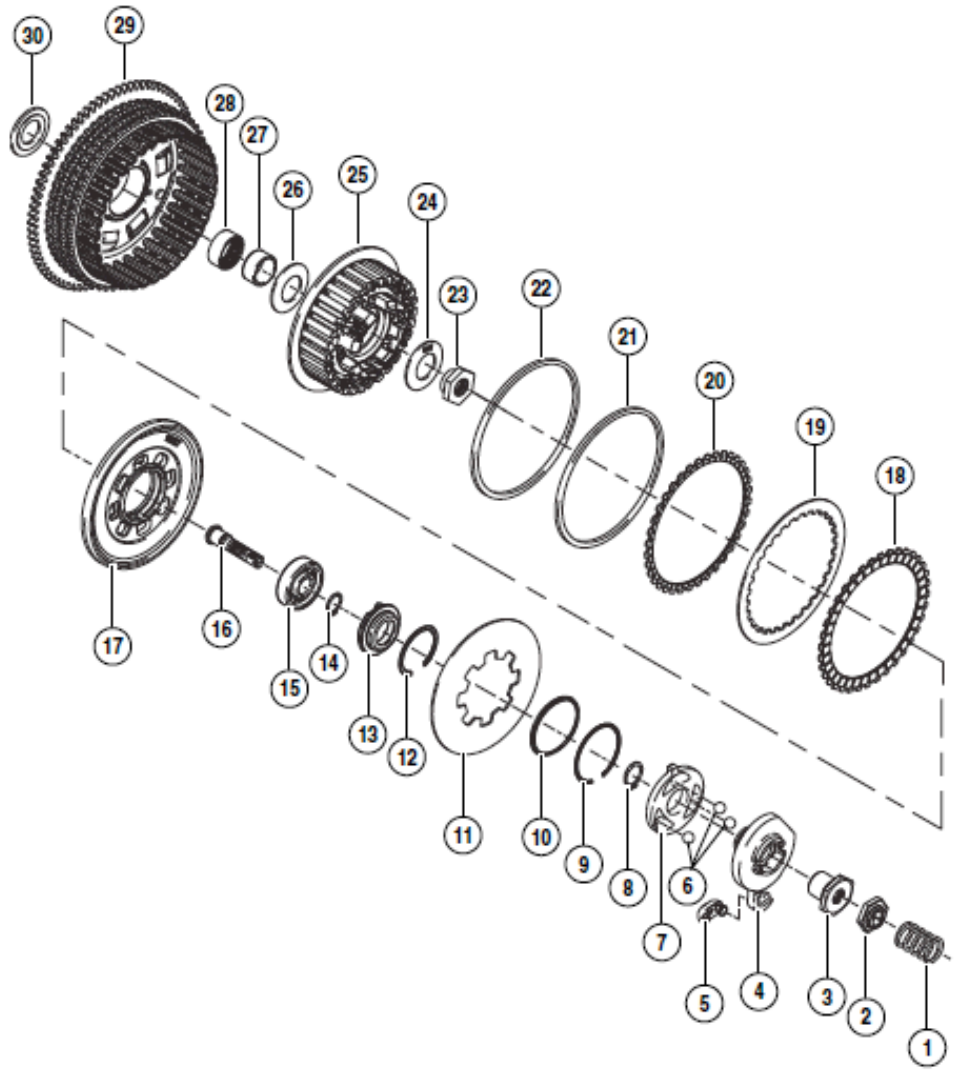


1. Spring
2. Lockplate
3. Nut
4. Outer ramp
5. Coupling
6. Ball (3)
7. Inner ramp
8. Retaining ring
9. Retaining ring
10. Spring seat
11. Diaphragm spring (separate spring for XB9R & XB12R)
12. Retaining ring
13. Release plate
14. Retaining ring
15. Bearing
16. Adjusting screw
17. Pressure plate
18. Friction plate, paper (7)
19. Steel plate (7)
20. Friction plate, narrow
21. Damper spring
22. Damper spring seat
23. Mainshaft nut
24. Washer
25. Clutch hub
26. Inner thrust washer
27. Needle bearing Inner race
28. Needle bearing
29. Clutch shell and sprocket
30. Outer thrust washer

Figure 6-12. Clutch Assembly